# Product specification: ASL XD6500HP/G

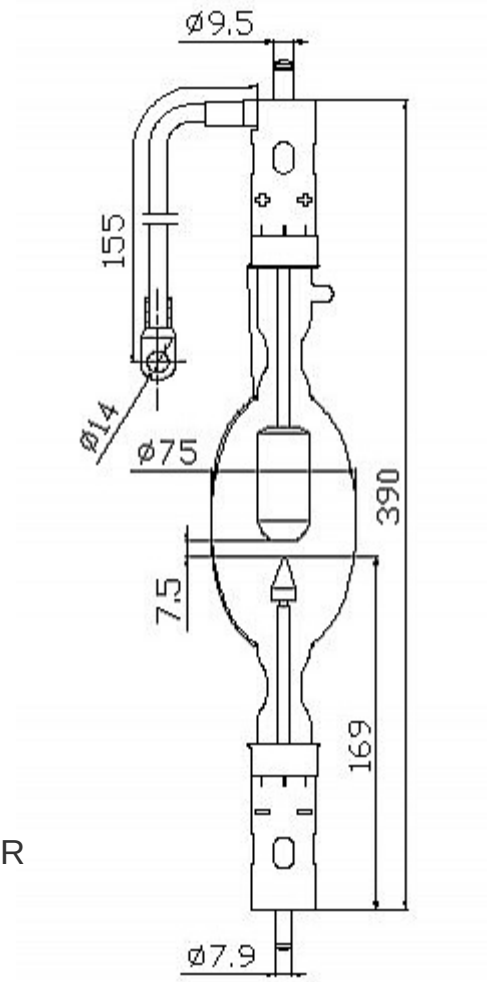


## Warranty:

100% Credit: 0-600

## Technical specification:

Power (W) - 6500

Rated Current (A.D.C.) - 170

Voltage (V.D.C.) - 39

Current Control Range (A.D.C.) - 120-175

Average Lumen Output (Lm) - 320000

Burning Position - H±15° V±15°

Forced Air Cooling (m/sec.) - 10-13

## Cross Reference:

LTI - XDC-6500TA

OSRAM - XBO 6500W/DHP OFR & XBO 6500W/HSLA OFR