Product specification: ASL XD3000HP/G

Warranty:

100% Credit: 0-1600

Technical specification:

Power (W) - 3000

Rated Current (A.D.C.) - 100

Voltage (V.D.C.) - 30

Current Control Range (A.D.C.) - 70-105

Average Lumen Output (Lm) - 145000

Burning Position - H±15° V±15°

Forced Air Cooling (m/sec.) - 10-13

Cross Reference:

LTI - XDC-3000B

OSRAM - XBO 3000W/DHP OFR

USHIO - DXL-30BAF

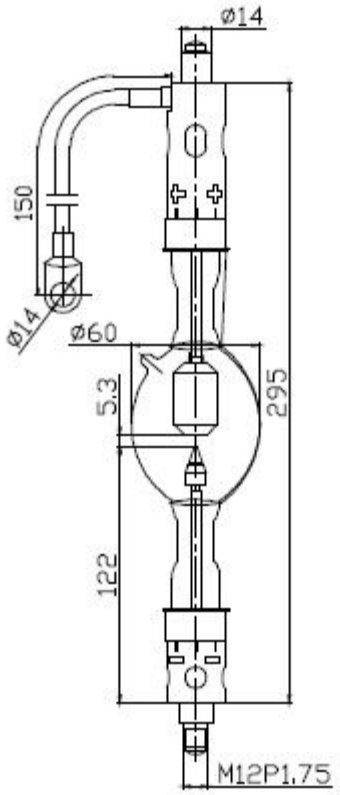

Specs subject to change without notice. Document generated 2021-10-23.